M.S.T.I., Optimizing the Whole System

Delia Grenville and Brian M. Kleiner, Ph.D.
Department of Industrial and Systems Engineering
Virginia Polytechnic Institute and State University

John F. Newcomb
Scientific Management, Inc.

Case Study

Table of Contents

APPROACH iii

BACKGROUND: DRIVERS TO PARTNERSHIP 3

PARTNERSHIP GROUND RULES 4

CAPABILITY (HARDWARE)-DRIVEN DESIGN 6

SELECTING THE JPL PROJECT TEAM 9

FASTER DESIGN 10

ON LOCATION 14

ORGANIZATIONAL DESIGN 15
TEAM MEETINGS 15
COST REPORTING 16
THE EFFECTS OF COLLOCATION 17
DESIGNING FOR INTEGRATION AND TEST 18

THE SCHEDULE, THE SCHEDULE, THE SCHEDULE! 20

SUMMARY OF KEY PRACTICES: BUILDING PORCHES NOT FORMULA 1'S 21

CASE SUMMARY 25

LIST OF ACRONYMS 26

REFERENCES 27

Approach

This case study was developed in the interest of continuously improving program and project management at NASA. To augment a traditional case method approach, a theoretical framework adopted was from the sociotechnical systems tradition. Research for this case included comprehensive literature review, and detailed interview. To augment this case study, there is an available instructor's guide. In addition, learning modules have been developed based on the sociotechnical systems framework. These exercises prompt participants to understand MSTI success from the perspective of the NASA Project Cycle. Project cycle variances and key practices and tools are identified in the context of project management.

It should be noted that the focus of this case study series is in the area of project management. Projects were selected based on the potential of providing leassons learned to current and future program and project managers. An outcome-based assessment of the projects studied may ultimately determine that mission objectives were ultimately not realized, but nevertheless project management lessons can be transferred for the betterment of program and project management at NASA and elsewhere.

M.S.T.I., Optimizing the Whole System

'When you make small spacecraft you have to optimize the whole system' Kane Casani Miniature Seeker Technology Integration (MSTI) project manager, remarked. Optimizing the whole system and not suboptimizing is a concept popularized in recent years by the late W.E. Deming who said, "an example of a system, well optimized is a good orchestra. The players are not there to play solos as prima donnas, each one trying to catch the ear of the listener. They are there to support each other...The conductor, as manager, begets cooperation between the players, as a system, every player to support the others...The obligation of any component is to contribute its best to the system, not to maximize its own production, profit, or sales, nor any other competitive measure.(Deming, 1991, pp 10-11)"

Kane was defining the "system" as the entire project and asked the question "What made most sense from an overall project point of view?" This was different from the classic approach of optimizing the spacecraft design with tight tolerances for the major parameters such as weight and volume. This was a major change in JPL design philosophy.

Throughout the MSTI project, meeting the schedule was a crucial factor that affected all decisions. The team knew that new approaches to design had to be embraced in order to meet the launch date. Instead of optimizing subsystems, at each design phase of the spacecraft, the whole system was optimized at each design phase. This type of change in approach to doing business defined the successes and characterized improvement areas in the partnership culture that emerged during spacecraft production.

MSTI went into orbit on November 21, 1992. The spacecraft was the first of its kind – a rapid development spacecraft, designed and launched in one year (see figure 1 for details). Phillips Laboratories, JPL, and Spectrum Astro, partners in the endeavor knew they had met the faster, better, cheaper criteria they had committed to at the onset of the project.

Five years later, the MSTI team reflected on the long-lasting effects and some of the changes, both subtle and monumental, that came about in each of their organizations as a result of MSTI.

This case study was developed in support of the NASA Program and Project Management Initiative. The authors would like to acknowledge those individuals who contributed their recollections and expertise to this case study. Special thanks to Stan Dubyn, Kane Casani, Bob Metzger, Guy Beutelschies, James Crane, Nick Thomas, Joe Toczylowski, Jim Aragon, and Kathy O'Hara. Also, thanks to the NASA Office of Training and Development and W. Warner Burke Associates, Inc. for their support.

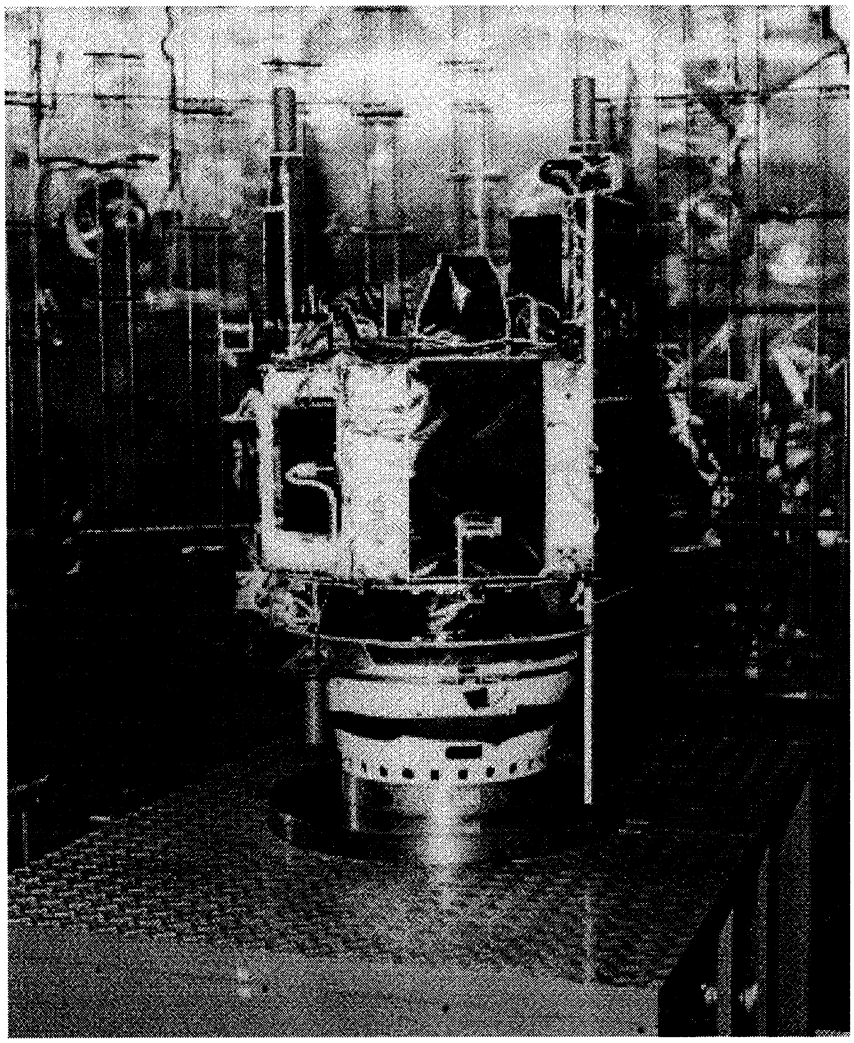

Figure 1 – MSTI Spacecraft (photo courtesy of Spectrum Astro)

Mission Details

"The first satellite in the MSTI series, MSTI-1, was launched into low earth orbit (LEO) 21 November 1992 from Vandenberg AFB, California, on a NASA SCOUT booster and succeeded in meeting all primary mission objectives, surpassing the 6-day data collection mission requirement. The spacecraft operated in its 400-km polar orbit until the spring of 1993 and collected well in excess of 100,000 frames of background data in the medium wave infrared wavebands. Jet Propulsion Laboratory (Pasadena, CA) built the MSTI-1 sensors. The MSTI-1 spacecraft weighed just 150 kg and was built for $19M in less than 12 months. The mission paved the way for the more sophisticated detection and tracking payload on MSTI-2."

http://www.plk.af.mil/PLhome/SUCCESS/msti.html

Background: Drivers to Partnership

Changes in direction prompted the Strategic Defense Initiative Organization (SDIO) to position the Phillips Laboratory at Edwards Air Force Base California to lead in the development of small spacecraft. SDIO envisioned a hands-on learning experience for Phillips Laboratory that involved the rapid development of small spacecraft in a team environment with NASA and industry contractors. SDIO issued $20 million to JPL's Technology Applications Program (TAP) Directorate for the development of spacecraft that met simple requirements but were built against a compressed schedule. Their vision was to encourage rapid development of a series of small spacecraft that incrementally increased in complexity and ability. The initial objective for the MSTI spacecraft series was to 'perform experiments to characterize a wide variety of SDIO advance sensor technologies in the Low Earth Orbit (LEO) space environment (Barnhart, Feig, Grigsby, p1).' All the team members involved in the project viewed themselves as working in partnership towards the project's success.

In early 1991, Spectrum Astro (then Spectrum Research), a small research and development contractor, won the Advanced Satellite Subsystem Technology Demonstration (ASSTD) competition sponsored by DARPA and managed by Phillips Lab. Spectrum's design was a multi-orbit multi-mission advanced technology small spacecraft. Spectrum developed the SA-100 Spacecraft series bus with an 'adaptive architecture which was designed to flexibly accommodate new payloads and technology at low cost and rapid schedule.' At this time, Spectrum Astro was also transitioning from design to development. As a company, Spectrum had no previous expertise in the development arena. However, SDIO's directive for small spacecraft development provided an excellent opportunity to use the new modular bus design, which could accommodate a range of small payloads on Phillips' new project. It was uncommon for JPL to engage in such a large contract with a young company. Kathy O'Hara, procurement representative and contract negotiator for MSTI, explained,

> "This particular company [referring to Spectrum] had done business with the sponsor before. They had developed this bus. To have somebody else go and develop this bus that we wanted to use would take much more money and delay in the schedule. And, because of that we were able to single source."

In response to its lack of experience in spacecraft development, the Phillips Laboratory established a partnership with JPL to gain knowledge and expertise about this process. At the same time, changes in the JPL environment also promoted an internal shift towards the development of smaller spacecraft. JPL management would have allotted up to three years to complete a similar project in the past. However, Phillips, JPL, and their contractors embarked on MSTI I

spacecraft with a projected one year timeline. The formal partnership structure is shown in Figure 2.

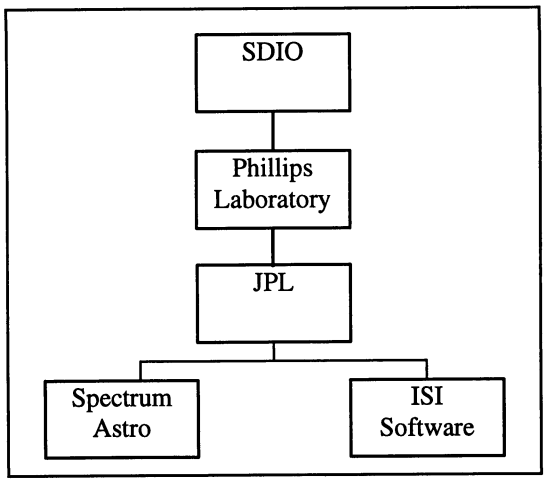

Figure 2 - Formal Partnership Structure

Bob Metzger, Manager of MSTI's Hardware Acquisition Team, described JPL's perspective on involvement in the new project:

> "JPL wanted to get involved in MSTI because we thought this was an opportunity for us to partner with the Air Force organization. It was an opportunity for us to take some of our young engineers, who didn't have the legacy of 30 years of space development heritage behind them, and have them work with the young engineers from Spectrum and the Air Force in a program that had a very aggressive schedule and in the end had to be successful."

Partnership Ground Rules

At the onset of MSTI, Kane Casani, JPL's project manager knew that a quick and effective start-up was imperative in order to meet the demands of the compressed schedule. The project office was formed in early October 1991 and shortly thereafter JPL held the Systems Design Review (SDR). At the advanced design meeting, the partners defined the system requirements and divided project responsibilities. The principal partners on the MSTI team accepted work within their area of expertise. Each partner would be responsible for the procurements and contractors within their domain of responsibility. The responsibility for "project management as well as active participation and coordination of integration and test, launch and mission operations"(Barnhart, Feig, Grigsby, p2) would rest with JPL because their knowledge of the business. Stan Dubyn, co-owner and founder of Spectrum Astro, provided the details of the advanced design meeting:

"We met out at Edwards Air Force Base [Phillips Lab]. It was Kane and myself, Bob Metzger and Jerry Chicoine who is our Vice President for Advanced Design. We sat down in a room with the customer and we divided up the pie [responsibilities] on the chalkboard. We said "Well, who's going to do what?" And we went around the table, we spent all day out there — I remember it very well." We finally came to the conclusion that JPL should try to do what JPL thinks that they can do, faster, better, cheaper. Spectrum Astro should do (we were only a 12-person company at the time) what we think we can do faster, better and cheaper — as an experiment, and at least see how it works. And, if it doesn't work out, we can always change it later. But let's just see how this works. So JPL did the telecom system (actually they did the analog telecom system, Spectrum did the digital telecom system) JPL did the electrical power in MSTI 1, Spectrum Astro did the avionics. Spectrum Astro did the structural design, JPL built the structure. We worked with them on the test of the structure. Spectrum Astro was responsible for the guidance, navigation and control system. A company called ISI developed the actual flight software, using auto-generated Matrix-X code. Spectrum did the thermal, JPL did the propulsion. We shared project management functions, system engineering functions, quality assurance functions, and technician functions. Both organizations supported those four activities. There weren't any arguments - I think everyone felt comfortable with the context of this being an experiment to try to change the way in which spacecraft are designed and developed."

With the compressed schedule in mind, the meeting continued as the team worked together to determine what milestones were required to meet the projected launch date. The Preliminary Design Review (PDR) and Critical Design Review (CDR) were both identified as the project's most important milestones in the design phase. But opinions, about what tasks must be completed prior to each review and to what level of completion, varied among the team members. The MSTI project team decided to define up-front both the preliminary design and the critical design criteria specific to their project by listing in detail what tests needed to be completed before each review. The team decided that once their mutually agreed upon criteria were met at each design stage, the review would be held and there would be no further redesign. Kane Casani, MSTI Program Manager explained,

"We said once we're finished the preliminary design that is the end of it. I don't want anybody coming back and re-examining whether we made the right decisions or saying let's go back and look at this again. We are going to decide what we are going to do and we are going to stick with it...

We said we are going to make them [decisions regarding the spacecraft design] in this time period. Once we make them we are not going to go back and waffle around or re-examine it or look for the optimum decision. As it turns out there were very few of them that were wrong, very few of them. That's how we got through this project on schedule."

At the end of this all-day session, the team left with a clear division of responsibilities amongst the partners. Everyone had agreed upon the necessary criteria in the spacecraft design process for the preliminary and critical design reviews. The MSTI management team had also set the tone for "making smart decisions and good decisions but not optimal decisions, because optimization would not be a cost-effective process for this project." Stan remembered this time saving decision-making strategy as a characteristic of the entire project.

PDRs and CDRs for Small Spacecraft

Deciding what stage of the design process is appropriate for the preliminary design and critical design reviews of small spacecraft is an important decision for the project's leadership team. The appropriate phases for PDR/CDR's are clearly defined for traditional "flagship" missions. But, the question remains what is the correct analogy for small spacecraft? Because of the cost, requirements, and schedule associated with smaller spacecraft, the MSTI Project held only one PDR and CDR on the entire spacecraft instead of on each subsystem. Inherent in the choice to hold a single PDR and CDR is the assumption of increased risk. How much risk is appropriate for these missions? How is risk associated with the definition of the mission requirement? As in all missions, the assumption of risks and understanding of requirements is a management decision that affects all levels of the spacecraft design and development process.

Capability (Hardware)-Driven Design

With only a year to launch MSTI 1 and relatively small budget, the team turned to existing hardware and software capability to incorporate in the design. Stan Dubyn, identified the compressed schedule as an opportunity because:

> "Every time the military wants to test a payload or if they want rapid turn-around to evaluate, assess, and finally be able to determine whether these technologies are something they want to implement on their future operational systems, they shouldn't have to buy into a 200 or 300 million-dollar space program to do it. If you stand back and look at that it makes a lot of sense. If there is some fundamental flaw in that technology, it turns out that maybe they have only spent 2 years and 20 million dollars to come to find out that it's not a good application in space. Your traditional program would have taken 10 years and 500 million dollars to come to the same conclusion. In this context, a 'failure' can be instrumental to success."

From a systems engineering perspective, the management philosophy behind capability driven design meant investigating what was available and aggregating those capabilities into the design.

Guy Beutelschies, JPL Deputy Spacecraft Systems Engineer for the MSTI Project began to survey available hardware even before the official formation of the

MSTI Project office. And, in keeping with the capability-driven philosophy he used Spectrum's bus design as a starting point to determine compatible components. Stan Dubyn, whose role also included Lead Spacecraft Systems Engineer, embraced the capability-driven design philosophy. And, in many ways, maximizing the use of available technology was already in keeping with Spectrum's no-nonsense approach to design.

Here are some of Guy's perspectives on the benefit of capability driven design versus requirements driven design:

- Taking advantage of industry capability
- Avoiding "Reinventing the Wheel"
- Allowing industry partners to use familiar standards (e.g. Quality, Test, etc.)
- Avoiding cost of requirements definition, design review, development, reworking design mistakes, quality testing, etc.
- Lowering risk because identical components have flown before.

Source: Systems Engineering on Small Spacecraft, Guy Beutelschies, 1992

Spectrum had developed their own three-pronged approach to multi-mission spacecraft. The first was a spacecraft bus design that Stan Dubyn called his "Lincoln Logs" concept. The bus could be made smaller or larger by simply adding more of the same types of structural members. This would allow for many different spacecraft configurations with the same basic parts; because low parts count plus high communality equals low cost. The second was the use of standard electronics architecture so that most electronic subsystems would be compatible and use standard interfaces. The third part of the approach was to design spacecraft so that the subsystems were on the outside of the structure allowing for rapid change out.

Everyone, who was involved in MSTI, however cautioned that the success of capability driven design was dependent on the nature of the spacecraft coupled tightly with the flexibility of the design margins. The MSTI team defined the applicable domains for requirements driven versus hardware (capability) driven design as follows:

Requirements Driven	Hardware (Capability) Driven
10-15 year lifetime	1-2 year lifetime
Multiple mission focused	Single mission focused
Optimized performance	Acceptable performance
Highly interactive subsystems	Independent subsystems

Figure 3 – Summary of Applicable Domains for Design

Capability-driven design also meant that the design team took advantage of large design margins and relaxed requirements. Guy identified "that decisions can be made more quickly by maintaining large margins in mass, power, pointing, and other key areas because a wider range of design choices can be easily accommodated." In smaller missions, like MSTI, larger design margins go hand-in-hand with the paradigm shift to whole spacecraft PDR's and CDRs. One specific example involves the use of the solar panel, Kane explained,

> "We did it with the solar panels. I can't remember the exact numbers but there were initial estimates for 2 or 3 million dollars. We worked a deal with our solar panel supplier. We bought the panels from them for $230,000... What we did there was we bought cells from them that did not meet the performance threshold that they had for an Air Force program. The Air Force program said that they [the cells] had to have a performance [spec] plus or minus 10%. We bought the ones that were 11% low (i.e. we bought the rejects). But the rejects weren't bad. And the other thing is that we bought the same cell layout and design that they were putting together for this Air Force project. The layout of the solar panel and where you put the cells and how you wire them together is a very expensive design factor. So we said, we will just buy the panel that you are building for the Air Force. Then we could [take advantage of] all the tooling and design they were already <u>using</u>.

In order to do that the panel was bigger than what we needed. First, of all it would be a problem fitting it [the panel] inside the scout shroud. So we had to work with the launch vehicle guys to let the thing stick two inches lower than it was supposed to. Technically it wasn't a problem, but it violated their interface spec.

> We said, "So what... But there's nothing down there."
>
> "Well we don't want you putting your panels down there maybe someone will want to put something else down there"[they responded].
>
> "Well maybe they will, maybe they won't, but they are not going to are they?"
>
> So they said, "Well no not really". So it's ok. Yeah it's ok.
>
> "It turns out that the panels also had 40 watts of output power more than we needed. So the power guys said we should cut the panels down so that they don't put this much power out because who's going to use it. And, I said if we cut these panels down the cost is going to go from 230K to 2 million dollars. So again there was this mentality to want to optimize everything. This little bit of optimization, while true we didn't need those extra 40 watts, would have cost us an arm and a leg."

The team estimated that capability-driven design resulted in significant cost savings. The estimated cost differential was $15.0 M versus $99.2 M for

requirements-driven design. Differences in design process costs are shown in Figure 4. Many of these differences are as a result of customization that would have been required to meet exact design specs and precise design margins.

	Hardware Driven	Requirements Driven
Power	$1,069,000	$5,345,000
Command & Data Handling	806,000	4,433,000
Telemetry Tracking & Command	2,989,000	28,395,000
Attitude Determination and Control	1,230,000	12,300,000
Software	872,000	4,796,000
Structure Thermal & Cable	2,074,000	3,938,000
Propulsion	973,000	8,271,000
Payload	758,000	6,822,000
Reliability & Quality Assurance	140,000	2,940,000
Safety	34,000	396,000
Systems Engineering	213,000	1,065,000
Project Management	717,000	4,302,000
Management Reserve	3,111,000	16,157,000
Total	$14,986,000	$99,160,000

Figure 4 - Design Process Cost Comparison (E.K. Casani, 1992)

Selecting the JPL Project Team

The MSTI project was not exactly business as usual for JPL (Dettinger, 1993). The compressed schedule, use of capability-driven design, and the team environment with industry contractors defined a unique project atmosphere for JPL employees. Kane Casani handled team member selection and he knew team members needed to be able to adjust quickly to the project's dynamics. At the onset, he characterized the type of people needed for the team as problem-oriented with a "can-do" attitude. As Kane reflected,

> "First of all we didn't hand pick the people. I didn't go down and say I wanted Frank here and Jamie there. We didn't hand pick them like that. What we did is we characterized the kinds of people that we wanted. We wanted a mixture of people that were experienced and who had been around for a long time. And then people who were fresh out from school who didn't have a lot of experience but had a problem-oriented-can-do attitude, were willing to take a chance, didn't have a lot of corporate investment, and were not afraid of embarrassing themselves so to speak. That was the criteria. A lot of them, particularly the younger folks involved, I didn't know before. But, I interviewed a lot of them for pretty low-level jobs. I wouldn't normally interview [at that level]. The project manager wouldn't normally

interview down at that level but I said, "I want to see some of these people." So that's the way we constructed the team. Some of the experienced hands, I didn't know them before. The propulsion guy I didn't know. The power guy I didn't know. But they had been around for a long time. So we had a few guys that were old seasoned guys. But I wanted those old seasoned guys to be risk takers too. I didn't want them to be people who said, you better watch out for this and you better watch out for that."

MSTI team members were chosen to accomplish the right mix of experience and innovation. The MSTI team had only one layer of management, therefore, each team member was expected to have an increased level of responsibility and accountability. The project manager interviewed every team member. This was an unusual practice at JPL. Normally, the project manager interviewed team leaders, and, then in turn, they selected their team members. Meeting with Kane during the interview and selection process set the expectation of increased responsibility and accountability for all team members.

Faster Design

The compressed schedule increased the importance of the use of available but advanced technologies and the use of standardized interfaces between each subsystem. For small spacecraft, Guy Beutelschies identified the purpose of the phase between the SDR and the PDR as three-fold:

1 Identify all major components on the S/C
2 Determine whether they are procured or built in-house
3 Determine vendor and model for procured hardware and delivery After Receipt Order (ARO)

In December of 1991, the PDR was held. Phillips Labs and an independent group of JPL engineers reviewed the spacecraft preliminary design along with the MSTI team. The preliminary design met the requirements of the MSTI demonstration program. Though faced with low cost and compressed schedule the MSTI design (figure 5) included only 30 % Class I hardware – build-to-print or off-the shelf, 20% Class II hardware – design variant, and Class III hardware –new developments (Dubyn & Thompson, 1992). In short, the design involved hardware that was bought and used as-is or hardware built specifically for the spacecraft, but, very little hardware was bought and modified to fit the spacecraft's need. The design team was experienced enough to know that 'minor' modifications usually cost more in both and manpower and took longer than anticipated.

Among the MSTI project team, peer reviews were quickly established as a forum for design critique, modification, and improvement. Both the PDR and CDR

were viewed as 'sage reviews', where outsider's viewed the existing design to provide information about possible design failures and necessary design changes. But, overall reviewers helped the team to look forward in the design process and not backward at enhancements to optimize an already acceptable spacecraft design.

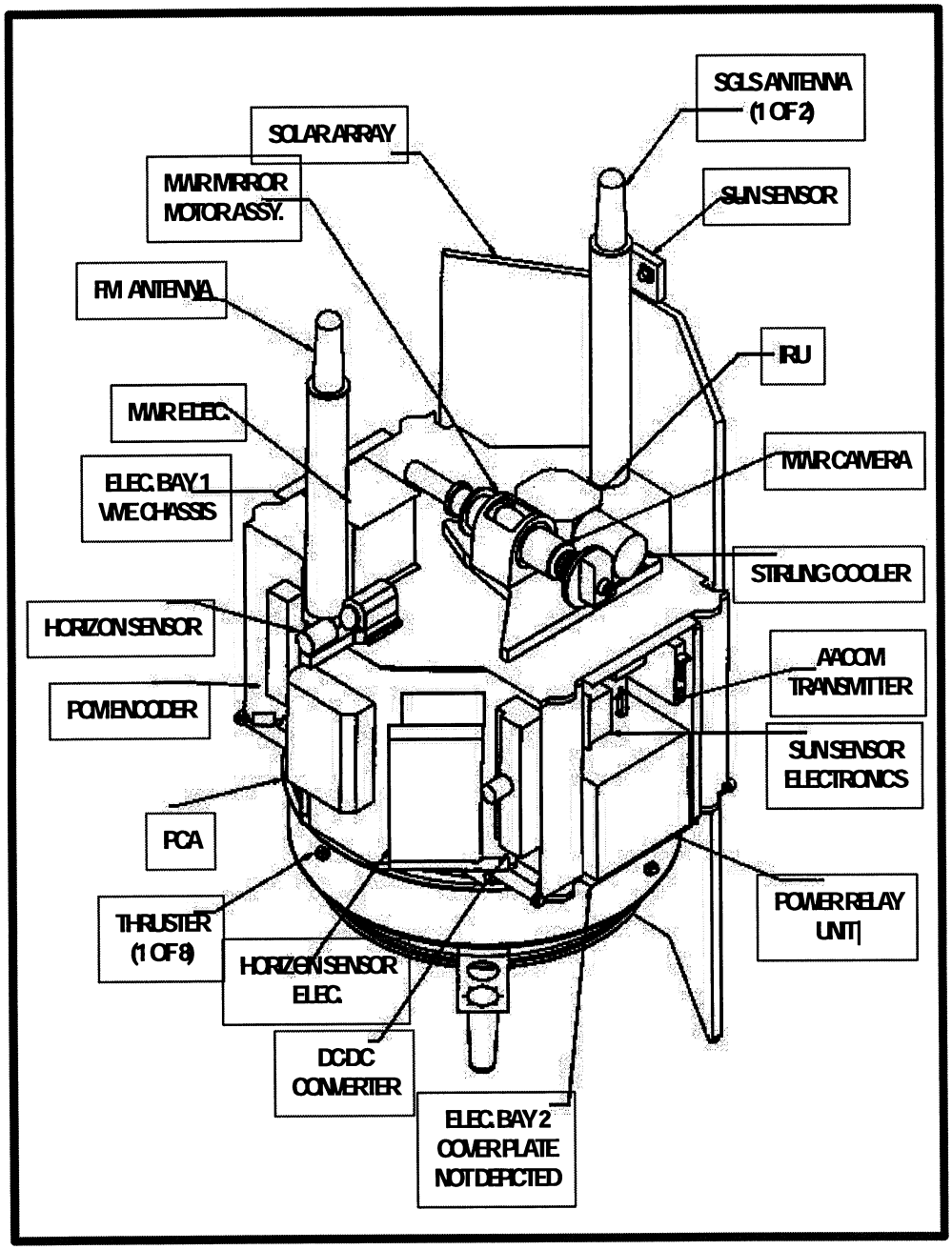

Figure 5 - Overview Design of MSTI Spacecraft (Source Spectrum Astro)

Quick design would mean very little, however, if the parts did not arrive on time. The MSTI team knew the relationship with procurement would have to be strengthened in order to maximize the benefits of meeting design objectives quickly. Kane and Bob met with the procurement team and presented the objectives of the MSTI project. They explained the team arrangement with outside sponsors and support contractors, and answered any questions the procurement team had. Kathy O'Hara, lead procurement contact, identified this meeting as a small change that had a huge impact. Kathy explained that afterwards, procurement and negotiators understood the bigger picture. If a MSTI purchase requisition came across a negotiator's desk, it received immediate attention.

Kathy worked directly with Kane on the negotiation of Spectrum Astro's cost-plus fixed-fee contract. Stan Dubyn worked in parallel with his team to prepare the proposal for JPL. Stan was concerned about common mistakes sponsors made when initiating compressed schedule projects. Often, sponsors wanted to reap the benefits of a compressed schedule and relatively lower costs but still hold the expectation of a detailed proposal from their contractors. Stan gave JPL credit for understanding that the cost, both time and money, of generating the Request for Proposal (RFP) had to be justified by the scope of the project, both time and money. Quotes in the Spectrum Astro proposal to JPL were detailed only to the subsystem level (3WBS). JPL determined this level of detail acceptable for small spacecraft. And, Spectrum Astro eventually submitted all of the required cost reporting at the subsystem level throughout the entire project. Stan used the following analogy to describe how he viewed the proposal experience.

> "If you're going to micromanage how many hours it takes for each little sub-element, then it's going to waste a lot of government time and a lot of government money to do that and to track that process. And ultimately there will be no cost savings in that. If you build a house, you're not interested in how many coats of paint it's going to take and how many layers of drywall. How many times the workman has to take that spatula and go over the drywall. How many nails he's going to hammer per 2x4, and how many 2x4's are going to go into the stairwell. You can get into that level of detail if you really want to get a detailed proposal. But, ultimately you lose sight of what the objective is, the objective was to have a low cost, high performance spacecraft, on a very short schedule."

Although there was really very little else that was unique about Spectrum's contract, Kathy did believe the way that the construction of the statement of work in a major procurement affected the contractor's ability to source quickly.

Spectrum was allowed to buy the items they needed for their deliverables through their own procurement process. Spectrum was obligated to ensure, however, that the items procured met specs, and underwent any changes or required development work. Procurement also utilized unilateral modifications (UM) to provide advance funding for those parts that required a long lead-time. The MSTI procurement team used U.M.s as a tool to deal with fire fighting.

The team found that because of the aggressive timeline almost each procurement was on the critical path. And, it soon became evident that helping procurement personnel to feel part of the team did not alone guarantee successful procurements. The oversight that caused a delay on the vibration table, which was the first large procurement item for the MSTI project, emphasized that a sense of partnership also required a mechanism for partnership between the technical team and the procurement team. Shortly, after this incident, Bob Metzger was put in charge of managing the interface between the technical group and procurement office. He formed the Hardware Acquisition Team (HAT) in January 1992. The team composition for HAT matched a technical person with a procurement representative for each design function. For example, the responsible telecommunications' technical lead had a procurement counterpart who managed sourcing of telecommunication.

The HAT was a learning experience for all involved. Procurement representatives participated in weekly technical meetings that also served as problem solving sessions. In general, the team spent their time looking forward on the procurement timeline to anticipate any potential problems. They reviewed the status spreadsheet of purchase orders and purchase requisitions updated each Monday and determined the 'pacing item' — the next item on procurement's critical path. Most importantly, the technical person and the procurement representative worked together to write specs for required parts. Bob Metzger insisted that the moment a technical lead knew of an upcoming procurement, he or she contacted Bob to schedule a meeting with their procurement representative. The technical representative was then paired with the buyer, who was responsible for the purchase, to write the spec and initiate the purchase requisition. Jointly creating the specs reduced rework for the buyers and potential delays for the technical team. An expediter worked with the team to move paper quickly through each of the procurement steps.

Looking forward on the procurement timeline and anticipating potential problems led the team to quickly identify suppliers who could potentially drop the ball. Bob handled these special cases directly. He dealt directly with JPL suppliers when needed to ensure that the supplier understood the importance of providing the item on time. Bob explains,

"We were having a heck of time getting sun sensors out of our supplier. They were kind of in a hold period because they couldn't get access to a clean room to do the final build up and testing of the item. So I called company's the director of manufacturing. He said, "Well we've got other orders, you are only one." I said, "I'll be out there to talk to you tomorrow." So I got out on a plane and flew to a little town outside of Philadelphia. I said, "I want to speak to the President, it's not a big company, and I want to speak to the director of manufacturing'. And I was able to see both of them."

Once Bob arrived,

"I need your cooperation now to make this program successful" Bob said. The president asked " So what is the problem, Joe." Joe responded, "Well, we've got these other jobs lined up." The president asked "Well are they critical are they complaining to you." " No", Joe said "but they are on our schedule, the way we are supposed to be doing things". The president paused and suggested, " Well, what if you use your clean room from 6:00 p.m. - 12:00 a.m. for JPL? Couldn't you authorize overtime for your technicians to work?" Joe agreed, "Yeah, I guess I can authorize over time for my guys to work."

"JPL had the sun sensor out of that facility in 4 days. I went wherever there were places that needed personal attention, we gave them all personal attention. Rather than sitting back and saying the guy couldn't deliver, we took some proactive action."

According to Bob, the HAT was responsible for more than 80 major procurements other than nuts and bolts. Not a single due date was missed on those major items. The team even helped Spectrum Astro with a few of their procurements. Particularly when it was evident that the supplier was uninterested in dealing with a small-sized company like Spectrum Astro.

On Location

By the time, the project team was collocated at Edwards Air Force base the CDR was completed and many of the major procurements had been made. The project team was fully engaged in the implementation and test phase and needed the advantages of working in the same location to quickly advance to completion. They worked off of red-lined drawings approved by the engineers. The team had many growing pains when they started working together in February. Phillips, in particular, was learning the business and simultaneously developing procedures. Spectrum Astro was a young and hungry company that was capable and dedicated but extremely optimistic in their expectations about the process due to their developing maturity. And, JPL was trying to develop a small team culture that accepted rapid design and development. It was an atmosphere where everyone was learning but most importantly everyone was cooperating.

Organizational Design
Team composition and dynamics were most important at this stage. The MSTI team from all three companies worked together on location for more than six months. The JPL team members were a careful blend of more mature and more experienced members and younger members less experienced with the traditional JPL approach. Spectrum Astro's team grew throughout the project. The company itself was less than a couple of years old at the beginning of the MSTI project and hired new personnel as required to absorb the workload. Many of Phillip's team members were on location already and were positioned to gain the necessary experience in small spacecraft production. At maximum, the team consisted of 35 people, 12 of whom were full time cognizant engineers.

Both Spectrum and JPL used a matrix approach to team design, JPL more formally than Spectrum Astro. Even while on location at Edwards Air Force Base for almost a year, Joe Toczylowski, who worked on the power subsystem contacted his JPL section manager daily via voice mail. The engineers on location knew that they could rely on their sections if any additional help was needed. On location, the MSTI project team cut across the organizations involved. Work was assigned to each team member by area of expertise. Responsible Engineering Authority (REA) was the name given to the engineering leads. REA's could come from any organization but generally were either from JPL or Spectrum Astro. Each REA had a Philip's counterpart.

Team Meetings
Many of the members of the JPL team lived at the Essex House, a 45 minute drive each way to the clean room built from scratch in Building 90 of Phillips Air Force Base. One of JPL's electrical engineers, Jim Crane, and three others ate breakfast together and then car pooled to the facility for the daily 7:30 a.m. meetings. Kane led the meetings and provided an overview of what needed to be accomplished from the project standpoint. Each day the scheduler showed the team where they were in relation to project milestones. The team meetings served a dual-purpose, (1) to assign daily tasks and (2) to help the team stay focused on the bigger picture – the launch.

REA's were responsible for decisions making and, as the lead people of their sections, they were also accountable. REA's were also responsible for meeting the project criteria of cost and schedule in their section. Each REA prepared the budget for his/her section and Kane asked "that each ... who did the budget estimates in the beginning to act responsibly" throughout the project.

Kane also met weekly in a splinter session with Jason Feig, from Phillips Lab, and Stan Dubyn for a brief status meeting. These discussions were at a more strategic level.

Cost to Complete Approach and Management

The MSTI team asked each REA to evaluate his or her budget using the cost to complete approach. The REA reported at meetings whether or not there was enough money remaining to complete the project as budgeted. Whether or not the project was under or over forecast at any given time was of little importance if there was not enough remaining funds to complete the project. In the example below, the REA was over the planned budget ant the beginning of the project, but the task was completed under budget.

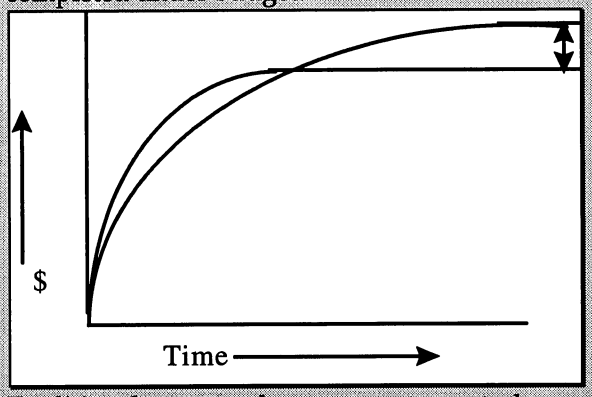

Traditional approaches to cost control would dictate that the REA spend a lot of time searching for explanations for missing the planned amount and would not be concerned with the overall cost to complete. As the MSTI team learned, when cost control approach is forward looking valuable time is spent anticipating shortfalls in the potential budget instead of justifying past performance.

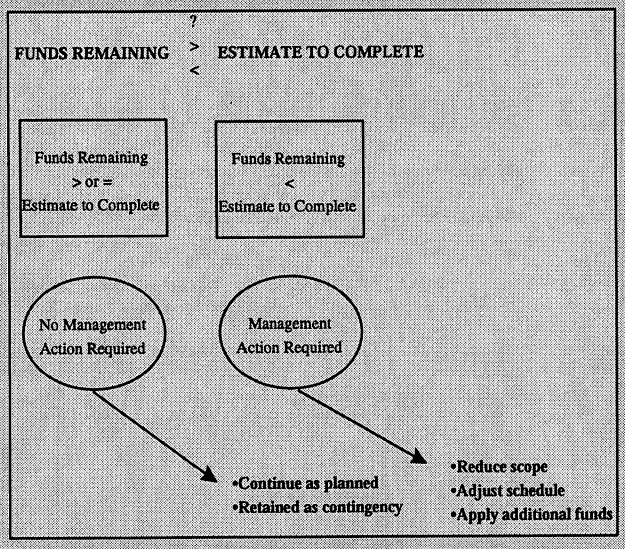

Stan Dubyn estimated about a 10% turnover on the MSTI team during the project lifetime. Turnover was due partially to improper fit at the onset of team members and also low confidence level from teammates.

Cost Reporting

Most long-term projects are cost-capped and the project manager usually focuses on staying within budget as the driving factor for project management even when the effort needed to meet the budget may push out the schedule. The MSTI team soon realized that their project was exactly the opposite of the traditional JPL paradigm. The MSTI Project was "schedule-capped". The project completion date could not be missed.

Kane decided early on that no REA should have any budget problems in this process. The traditional risk associated with a more or less 'blank-check' decision was minimized because there really was not enough time to spend money on resources that the project did not need in the first place. Yet, providing adequate budget gave each lead the sense that if something needed to be done or if flexibility was required in the spacecraft development, there was enough available money to

do so. REA's soon learned that in a compressed schedule, it was better to spend money to save time than to spend money to optimize performance at the subsystem level.

The project team engaged in a cost reporting technique called 'Cost to Completion - Budget Control Analysis.' When REA's met with Kane about their budgets, he would ask "Do you have enough money in the bank to get the job ahead of you done?" The REA's went through a lot of growing pains with this new cost reporting approach. It took a few sessions for REA's to understand that their project manager was not concerned about how current spending compared to forecast spending in the month they were evaluating. But, instead to report how current spending compared to projected spending for completion of the overall project. Kane realized that an REA could overspend in comparison to their overall budget for the first three months of the project and still have enough money to complete the project, especially if the initial spending represented 70% required cost of the total of his/her project. Because spending is difficult to predict month-to-month, REA's were treated more like contractors. They had been asked to cost out a job and then were expected to continually evaluate their ability to complete the job within their projected cost. Cost to completion technique was a forward-looking approach that reduced costs, which helped the project team to meet the demands of the timeline.

The Effects of Collocation

One of the most valuable by-products of collocation for the MSTI team was innovation in task management and problem solving techniques. Even before the all the companies moved on site, MSTI team members were collocated at JPL within their technical division. Once at Edwards Air Force Base with the whole team working together, the team simplified many of JPL's paper intensive procedures. Collocation also supported MSTI's flat management structure because everyone who worked on the project was easily accessible. The MSTI team operated with only one layer of management and minimized administrative process. Jim Crane recalled, "If he didn't know something, he knew who to see about it."

Jim Crane, simplified the Problem Failure Report (PFR) and he recalled, "there was such a small group of JPL people on site that no one ever realized that it wasn't the standard JPL form." He used File Maker Pro, a desktop database management program, to reduce the number of categories and intermediary signatures on the traditional JPL form. Jim maintained the information from the new form in an electronic database which he updated daily. He printed PFR status reports on demand, and his team was able to access the summary report even in his absence. The electronic report provided a snapshot of all the resolved and outstanding PFRs including electrical, environmental, mechanical. The

report helped REAs stay on top of potential problem areas. Before the launch, the PFR report was a valuable tool to determine if all red flag PFRs had been closed.

Jim Aragon, JPL employee, and Tom Hall, Specturm Astro, employee were the quality assurance (QA) lead engineers for the MSTI team. Once on location, they worked for Phillips Lab on loan from JPL and Spectrum. Together, along with the Phillips QA lead, they ensured that the spacecraft met all QA requirements. Jim recalled the team took some time to "hammer out" an operating mode, something he wished had been resolved up-front. But, once a method was in place, the daily interaction helped the team grow accustomed to peer reviews and collaborative problem solving. QA used the daily meeting to learn the status of project activities and also as a starting point for resolving problems. QA also found they used the collaboration and collocation to resolve conflicts at a lower level than they would have in the past on traditional projects. The scope of the smaller spacecraft also allowed QA to write basic and simple procedures that condensed the existing JPL policy.

Designing for Integration and Test

Even with the team always focused on where they were going, it was still sometimes difficult to make the cultural transitions JPL hoped to achieve during the MSTI Project. For JPL, part of the project's objectives was to make innovative improvements to in the way of doing business. Spectrum's young and optimistic culture acted as a catalyst for transition. Stan Dubyn was committed to the idea that a spacecraft did not always have to be built from scratch. Spectrum's bus design was a testimony to this belief. The bus design utilized standardized parts that could be configured to sustain any payload within the small spacecraft ranges. Stan himself described the flexible hexagonal bus as similar to the "Lincoln Logs®" or the "Leggo®" concept of modularity and design.

Spectrum also used a Hardware-in-the-Loop (HIL) test bed throughout the entire process. Parts arrived at the test bed first for assembly and testing. Once, the bugs were worked out of the test configurations, then an equivalent part went to the spacecraft. Spectrum viewed the test bed as an investment. Stan believed it was

> "Probably one of the single most important cost saving measures a customer can make, is to be able to have multiple sets of avionics and interface hardware... The money that you save up front, having that test bench and having everything work, before you get to the spacecraft, is many, many more times cost effective than waiting until you get to the system level than spending years at the system level trouble shooting."

There was a strong commitment by the Spectrum team to maintain configuration control on the test bed. In fact, it was maintained and used even after the launch. Even after the core components were delivered in March, the test bed was still continually used for parallel testing, truth testing, and repeatability when there were any problems. Core components included the structure, harness, solar ring and battery – from JPL; and, the 1750 computer, PDU/switchbox, attitude components, electronics, power conditioning– from Spectrum,. Stan Dubyn made the following comments on the HIL Test bed.

> "I hate to use the word concurrent engineering, so I'll think of something else. It's really what we call Developmental-Test-Bed-type approach. Where we develop the electronics and avionics early on, and we start interfacing those avionics to the central computer, CPU, whether it's a 1750, R6000 or R3000. And we start off with simple I/O devices so if we don't have a star tracker, we can at least use I/O devices to simulate the input and output that's going in and out of it. And as we upgrade the system, the system matures, as components become available. The first thing we start off with is maybe an engineering model CPU and a very early version of flight software. And [then we] interface the flight software with the CPU, just to get it to talk to each other –to get the CPU to run the flight software and see how it does. And then we start introducing I/O devices for reaction reels, and magnetometers, torque rods, star trackers, sun sensors, and simple I/O devices that just simulate those components. As the engineering models become available you can literally replace the I/O devices with the hardware in the 'hardware-in the-loop' setup, that's what we call HIL, a Hardware-in-the-Loop test bed, is really what it is. That essentially is a virtual spacecraft, if you will.
>
> But we're careful not to change the emphasis of the program from the spacecraft to the test bed, the emphasis is always on the spacecraft, the test bed is a support function. Albeit a very important support function, but the emphasis is on the spacecraft development. And we have dedicated people, engineers and techs, that actually take responsibility for running the test bed, interfacing with the spacecraft engineers, so there's a one to one correspondence that what we're doing on the spacecraft is what we're doing on the test bed."

In any project the personnel will need to make changes. However, the nature of the engineer is to produce a better product. Once the baseline requirements are defined up front, the change process must be efficient and allow for the necessary and yet have checks and balances for those improvements over and above the required, if the project is going to stay on schedule. The team remembered the difficulty involved with becoming accustomed to making acceptable decisions and not optimal ones at this phase of the design process. And, JPL, still continues to redefine the compromise between acceptable and optimal decisions for each application domain. Stan Dubyn, recalls that there were only 12 small interface changes on the MSTI Project and after the final SDIO

mission objective was stated in September there were no more mission requirements changes.

From experience, the team knew that while in the test and integration phase, de-assembly of the spacecraft to isolate a problem at any interface could potentially cost the project hours, to months of time. Stan Dubyn recalls that they reduced the time to isolate problems and de-assemble the space craft by mounting most of the components to the outside of MSTI 1 instead of nesting the hardware within the body of the craft. By mounting all components to the outside unless, there was a special reason not to, all parts were accessible within 8 to 10 hours. Stan recalls that this approach put the emphasis on troubleshooting and not de-assembly when the integration and test team found a problem. Mounting the majority of components to the outside of the spacecraft meant MSTI was designed for ease in integration and test.

The schedule, the schedule, the schedule!

No single criterion had a greater effect on the MSTI project than the aggressive timeline. As the team worked through Phase D of NASA's project design cycle, the overall effect of the schedule became more evident. The paper design was reviewed and accepted at the PDR, in December 1991. Approval at this juncture allowed the team "to turn the paper design into a hardware design,." as Kane stated, "to present it to people, and then to start actually getting in money in order to start building." The CDR came soon after in February 1992, and the approved hardware design incorporated substantial use of outsourced material. This included the auto-generated flight software developed by ISI, a software contractor.

In compressed schedule mode, there was not enough time available to build everything from scratch and customized flight software was not a feasible option for the MSTI spacecraft. The object-oriented nature of the auto-code program allowed the control engineers to use a building block approach to develop and auto-generate 75% of the avionics software themselves. Only about 25% of the command data handling was hand-coded by software programming specialists.

The schedule also created the need for faster design, faster procurement, and clear cost control. According to Guy, the systems engineering team reacted to the demands for faster design by first, specifying "how to do the design and not what the design should be." And, instead allowing the systems engineers to work with their respective interfaces. Next the systems engineering team, reduced the amount of oversight at the subsystem level. Lastly, they spend time away from team meetings researching and resolving action items. The need for

faster procurement Bob and Kathy recalled was met by creating the Hardware Acquisition team and working in collaboration with the technical team. The need for clear cost control was shown by the way that the project benefited from a management team who was not only technically aware but also fiscally responsible. The Cost to Completion - Budget Control Analysis was the technique the team used to maintain cost control.

In the integration and test phase the team held a flight readiness review and later on a Test Readiness Review. These reviews were important because they gave the MSTI team the outsider and sage perspective on the status of the spacecraft. The system was delivered to the launch area in September and readied for launch in mid-October. A series of aborts due to range computer problems delayed the originally scheduled launch until November 21, 1992.

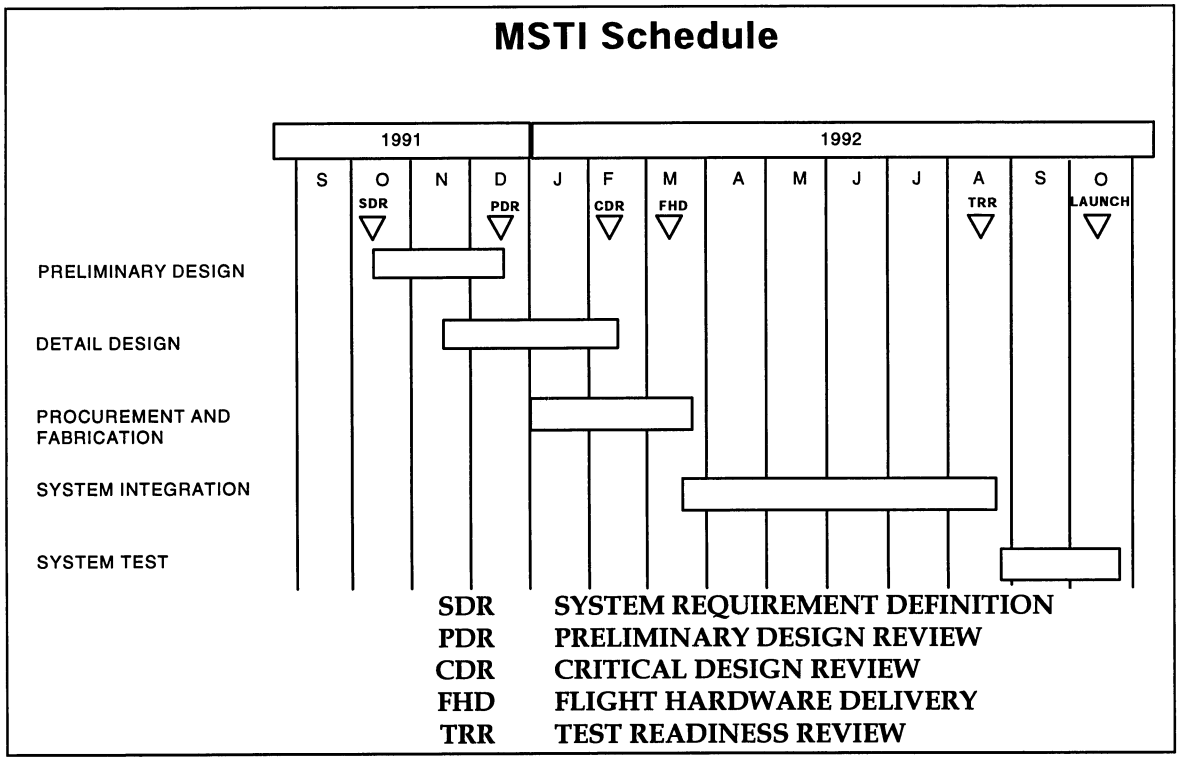

Figure 7 - MSTI Schedule (Source JPL D8242, Rev. H p 3-34)

Summary of Key Practices: Building Porches not Formula 1's

The MSTI project team quickly realized there were adjustments that had to be made to JPL's traditional approach to spacecraft development in order to stay within budget and to meet an aggressive timeline. The team proved to SDIO that they could bring a spacecraft from conception to launch within a one year time

period. But in order to do so, Kane Casani remarked that the team had to realize that they were "building Porches not Formula 1's." Both are excellent cars but the level of detail that distinguishes one from the other doubles the cost of the vehicle, and is only worthwhile for those who plan to exploit those differences. This analogy holds true for small spacecraft. The team quickly learned that they could utilize design margins to **reduce the level of optimizing** at the subsystem level and to enable them to **take advantage of existing hardware architectures**.

The team also learned how to resolve design as well as integration and test problems as early as possible. Identifying and resolving problems quickly was a function of the **daily meetings** and the **electronic PFR approach**. Both of these techniques were vehicles to enable peer review. **Collocating QA with the team early** on in the process also allowed problems to be discovered quickly, resolved earlier in the process and addressed at a much lower management level.

People took pride in their work on the MSTI team but more importantly they took **ownership** of it. The REAs managed their project areas and associated costs, procurements, and interfaces. REA's were responsible for **looking forward on the project horizon** and notifying the team of any potential problem areas. The team structure gave more responsibility to the actual team member. The team members reacted to the increased responsibility by learning to **streamline the decision process**. They made more smart decision and good decisions instead of optimal decisions.

The level of **information sharing** with JPL division managers also increased in the MSTI team environment. Team members took a proactive approach to informing division managers about the status of the project. The **level of role sharing** also was part of the team's success. Although each of the participating organizations focused on their expertise when they determined their areas of responsibility, they each had a **shared responsibility in every function**. Each of the systems engineering, quality assurance, and test and integration functions had team members from JPL, Spectrum and Phillips Laboratory.

Keeping focused also helped the team accomplish their objectives. The daily meetings kept the team focused on their task in the context of the big picture — the launch date. The **schedule itself was only maintained at a high level** in the project management office. Major milestones were communicated to everyone. And, it was always made clear to the project team that past events would not be allowed to cause the schedule to slip. The partnership arrangement was focused. The partners shared and **communicated a common vision** throughout the project.

There was strong top management support for the MSTI project from Dr. Stone, the JPL Director. JPL viewed MSTI as a change agent project that would help the move toward faster, cheaper, better missions and increased partnering with industry. JPL also viewed the project as a reengineering effort. MSTI provided JPL the **opportunity to reexamine their work methods** from a process standpoint. The MSTI team examined and reengineered how proposal were prepared, how spacecraft were built and designed, and how design was implemented. They also experienced project completion with a smaller team and benefit from having people share responsibility across interfaces. In general, people on the team **shared more end-to-end responsibility**.

MSTI Legacy

The MSTI program has produced a legacy that is continuing to evolve at JPL. The MSTI experience provided the beginning impetus for the JPL System test Bed, and later the Mission Design Center, and paved the way for a fast track procurement process.

One of the factors that led to the rapid development of the MSTI spacecraft was the decision to deliver designated portions of the hardware to the test bed for early integration. This practice allowed for early detection and correction of interface incompatibilities. This concept has been developed further by JPL into the ***System Test Bed*** where a spacecraft can be rapidly prototyped. In the laboratory, the response of the test subsystems can be determined alone and then interfaced with other portions of the spacecraft either by simulation or by the use of actual hardware. The System Test Bed allows for easy and early build-up of a spacecraft system. As soon as the subsystems become available, it can be tested for early detection and correction of interface incompatibilities. Trial of different subsystems determines which best performs the required functions when interfacing with the rest of the spacecraft.

The ***JPL Product Design Center*** was born partially from the needs identified in MSTI and subsequent discussions with possible industry and academia partners. In this center, a team of engineers can start with a rough set of mission requirements to develop a mission design or profile, and to design and cost a spacecraft to execute the mission. Engineers use computer stations on a local area network to design the mission, to choose the subsystems, and to apply their choices to a total spacecraft design. Therefore, tradeoffs can be made very rapidly between different subsystems, mission designs, spacecraft designs, and mission requirements. The Design Center can then be used to generate costs and proposals for the defined mission and spacecraft. Working in this manner, the design team can begin with preliminary requirements, design a mission and spacecraft, and develop a preliminary proposal in a matter of a few days.

The procurement methodology used in MSTI has been described in the case study. This evolved into a **Fast Track Procurement** process in which the RFP's can be generated in approximately 30 to 40 days and, in some cases, the time from release of RFP to contractor selection has been accomplished in 33 days. This process is facilitated by the early formation of a procurement team consisting of the technical and procurement personnel to provide close coordination. Close coordination avoids unnecessary delays. A short, performance-based RFP is then developed which usually contains provision for a small initial study which resembles a robust Phase A effort (at about $1M). An uncosted option for a follow-on effort is provided for Phase B, C, and D (approximately $20M). The draft SOW is developed, a bidders conference is held, and SOW is revised as per comments, and distributed.

After release of the RFP, questions and answers are addressed on an electronic bulletin board. A response to any question is published electronically within a 24-hour turn-around time. Electronic publication and quick response to questions via the World Wide Web minimizes the requests for extensions to the RFP due date.

The RFP requires a short response time with a proposal length of approximately 10 pages. This allows for a fast proposal development and evaluation. Costs are requested at only a very high level in the proposal. (Approximately only a one page cost summary)

After the top bidders are determined, site visits are performed and more detailed costs are obtained. Also, any possible changes to the terms and conditions of the contracts are requested at

the site visits. Typically, there will be few proposed changes since no award has been made at that time.

Top contenders are reevaluated after the site visits and the selection is made, the contractor is notified, and the contract is negotiated. Typically, the negotiation can be completed and the contract signed within one business day since all the terms and conditions have already been accepted.

Case Summary

MSTI I completed two full orbits. Shortly after MSTI went into orbit, the spacecraft exhausted its attitude control gas supply. Even so, the MSTI operations team was able to command the spacecraft into a spin stabilized configuration. They put the spacecraft into a gentle roll and enabled MSTI I to continue its operation for an additional seven months. During each spin interval, when the spacecraft was pointing towards earth, the on-board camera took photographs. In all, more than 200,000 photographs were returned from the spacecraft. Far more, than the single picture SDIO had originally requested. SDIO had a successful launch within a year. And, from a project management standpoint, all mission objectives were completed.

The MSTI experience changed JPL's culture, as well as their approach to spacecraft development and mission management. Faster procurement developed into an approach JPL now calls "Fast Track Procurement". Hardware acquisition teams are used often in JPL projects. The Hardware-in-the-Loop test bed was the precursor to JPL's new Flight System Test Bed that employs much of same philosophy to simulated test integration used on MSTI.

Many of the team members on the MSTI project moved quickly up the JPL ranks due to the increased responsibility and authority they were given on the MSTI project.

MSTI demonstrated that an aggressive schedule can be used to design low, earth-orbiting spacecraft – to optimize the whole system – to make as Deming might say, "beautiful celestial music!"

List of Acronyms

ASSTD = Advanced Satellite Subsystem Technology Demonstration

HAT = Hardware Acquisition Team

JPL = Jet Propulsion Laboratory

NASA = National Aeronautics and Space Administration

RFP = Request for Proposal

SOW = Statement of Work

WBS = Work Breakdown Structure

References

Barnhart, D., Feig, J., Grisby, E. (1994) Miniature Sensor Technology Integration (MSTI) Small Space Platform Program, Edwards AFB, CA

Beutelschies, G. (1992) The Role of Systems Engineering on Small Spacecraft (Tech Report)

Beutelschies, G. (1994). Systems Engineering on Small Spacecraft, (Tech Report)

Deming, W.E. (1991). Quality, Productivity & Competition Position. Quality Enhancement Semniars, Inc. Los Angeles, California. pp10-11

Dettinger, J.R. (1993). Some Thoughts on the MSTI propulsion Subsystem and "Faster, Better, Cheaper" Propulsion Projects, Inter Office Memorandum.

Dubyn, S., Thompson, D., (1992). MSTI Technology Backgrounder, Inter Office Memorandum.

MSTI Project: A Case Study in Cost Control (Tech Report JPL D8242, Rev. H)

Metzger, B.(1992) MSTI Project Presentation to OSSI/TAP Technology Development Workshop