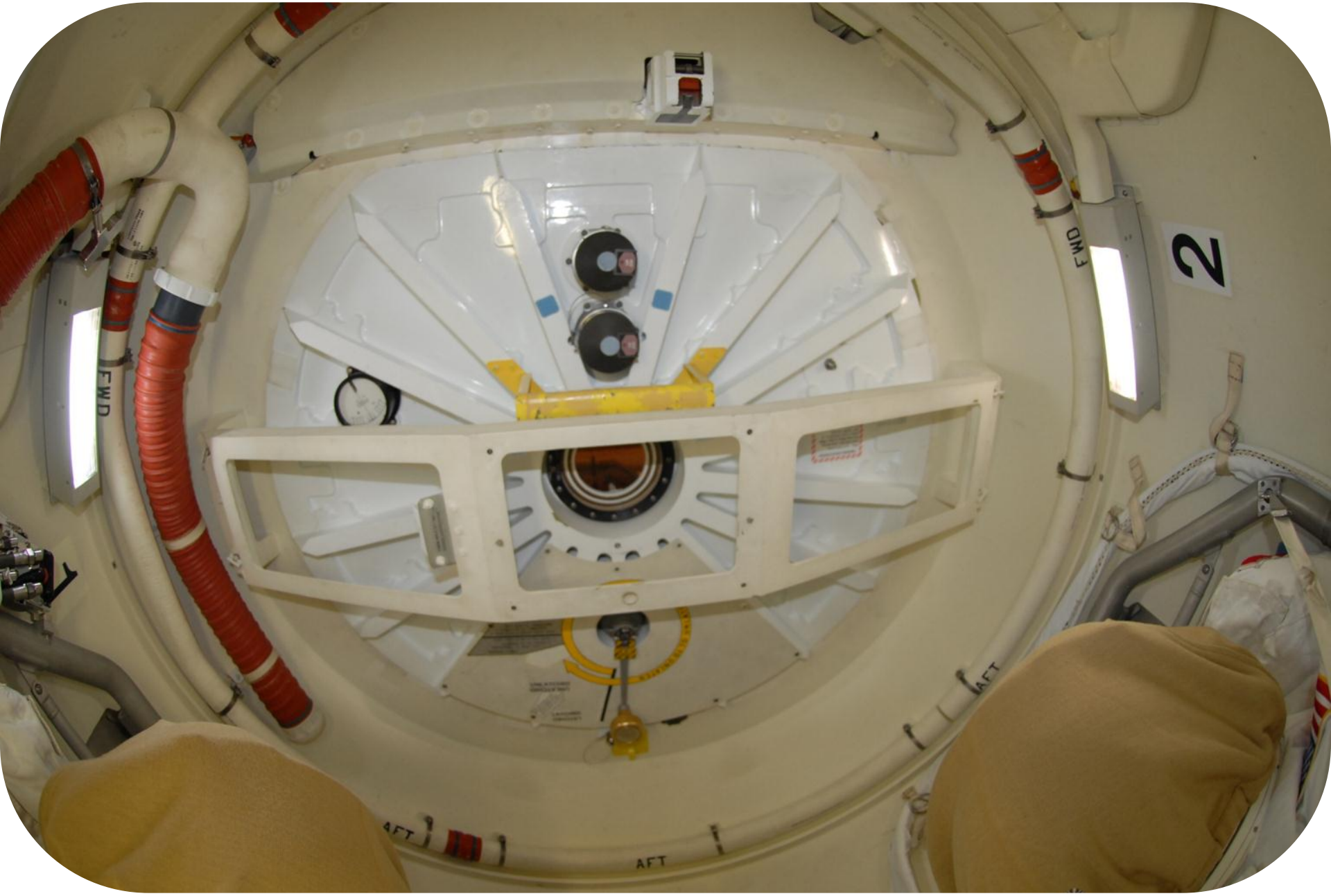
FWD
FWD
2
AFT
AFT
AFT

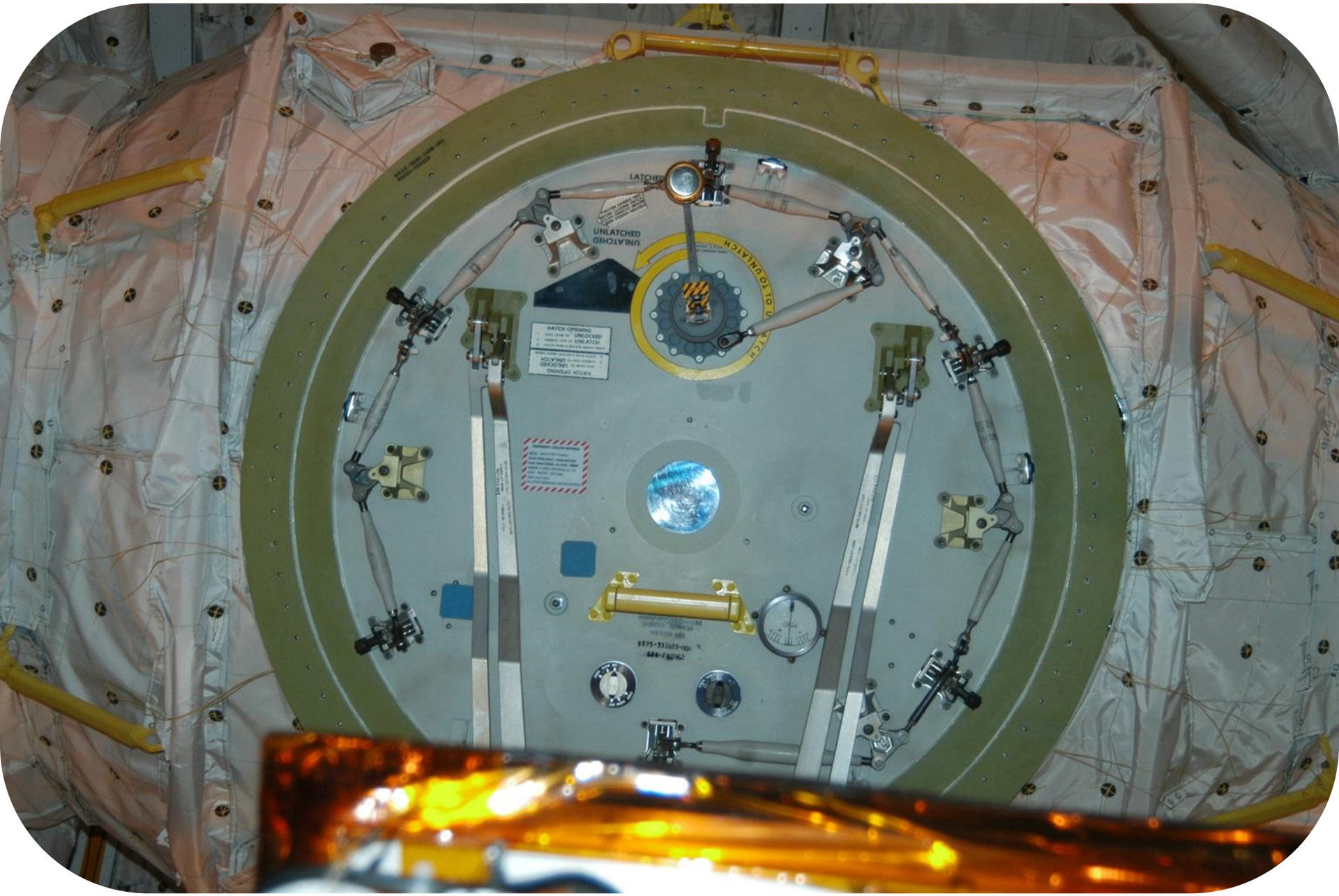
LATCHED
UNLATCHED
HATCH OPENING
UNLOCKED
UNLATCH

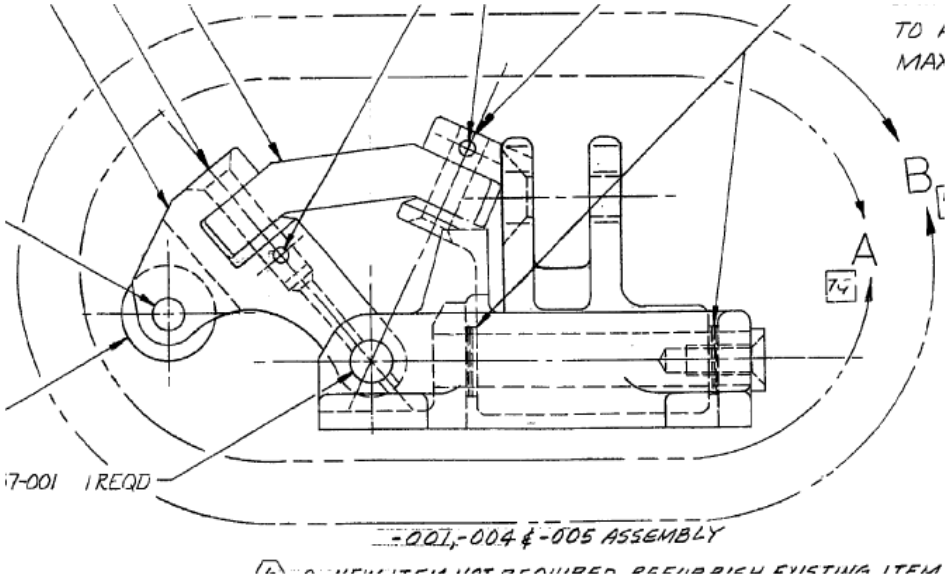
TO
MAX
B
A
7-001 1 REQD
-001,-004 & -005 ASSEMBLY

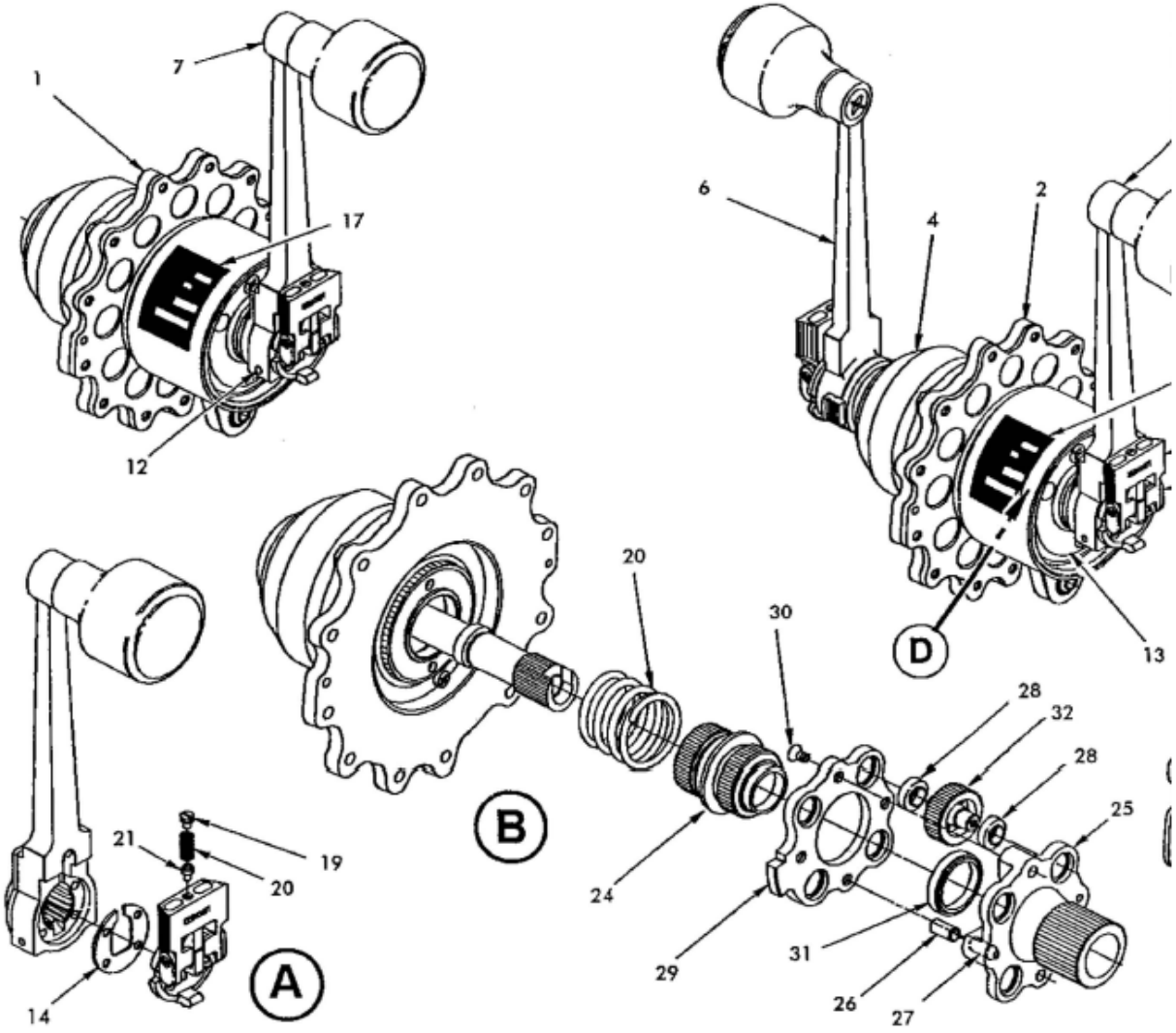

Figure 13-1. Hatch Latch Actuator Subassemblies (Sheet 1 of 3)